Design of a 2-D X-Ray Imaging System for ECCD/ECH Experiments on DIII-D

By

K.L. Wong, S. von Goeler, R. Feder, L.C. Johnson, PPPL, R.T. Snider, General Atomics, V. Trukhin, Kurchatov Institute

The Hard X-Ray Camera

- What can it do for DIII-D ?

- ECCD physics

  HXC produces 2D intensity map I(x,y,t),
  CQL3D code calculates $f_e(v,r,t)$ & I(x,y,t),
  - adjust D to fit data.

- Electron transport

  Energetic electrons from ECH used as test particles traced by the HXC, get D(E).

- MHD studies

  Locate fast electrons during stabilization of NTM.
  Tangential view may reveal high-k MHD near q=2.

Previous results from tangential x-ray imaging in LHCD exp'ts on PBX-M

by Schwick von Goeler et al.

History of Tangential X-ray Imaging # 2.

PBX-M Hard X-ray Camera

von Goeler, Kaita, Bernabei, Jones.

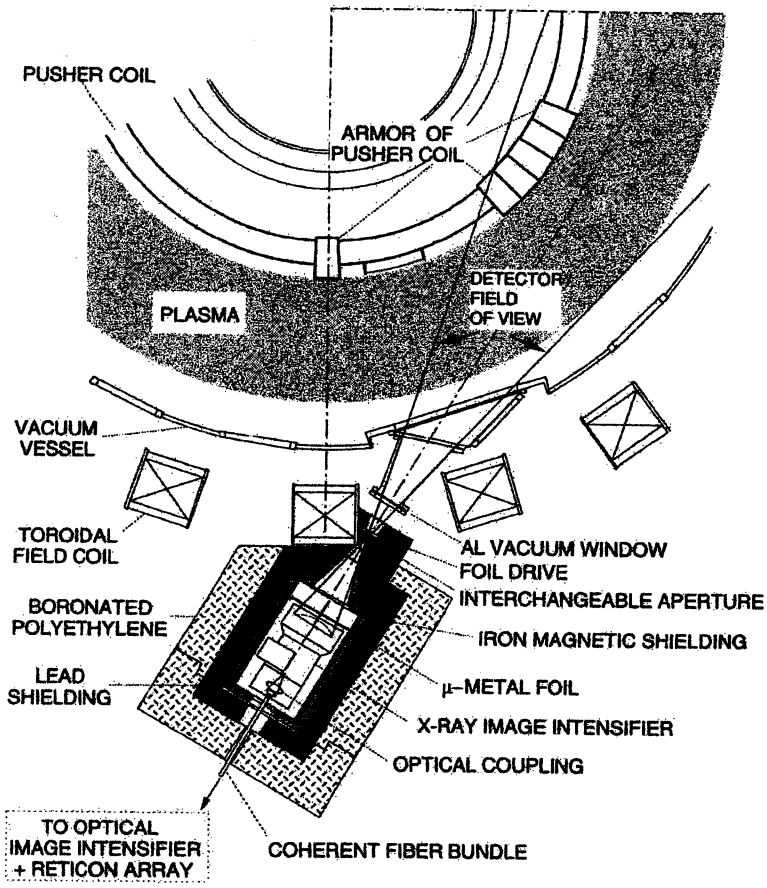

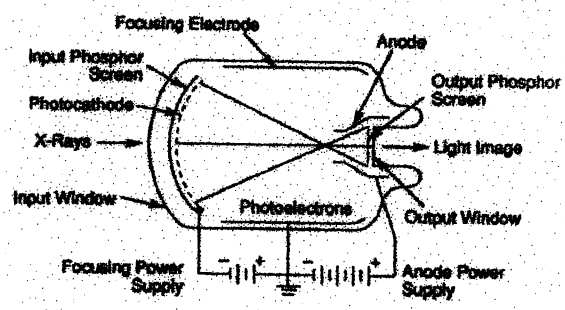

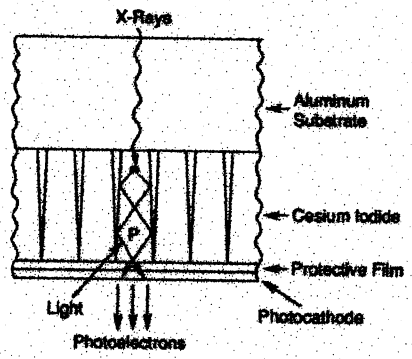

- Diagnose suprathermal electrons during LHCD.
- Large 23 cm dia. X-ray imaging tube → sufficient intensity.

Conceptual Design Review
GA - San Diego 9/27/00
S. von Goeler

PPPL
PRINCETON PLASMA PHYSICS LABORATORY

Results from Tangential X-ray Imaging # 2.

Foil Techniques - Hot Electron Temperature.

S.von Goeler and S. Jones on PBX-M.

- Foil techniques are used to determine the energy of suprathermal electrons.
- PBX-M profiles up-down symmmetric.
- Half-foils allow Tphoton-measurement during the same shot.
- Forward paralell temperature (T || f) from simulation of Tphoton.

X-RAY INTENSIFIER + HALF-FOILS

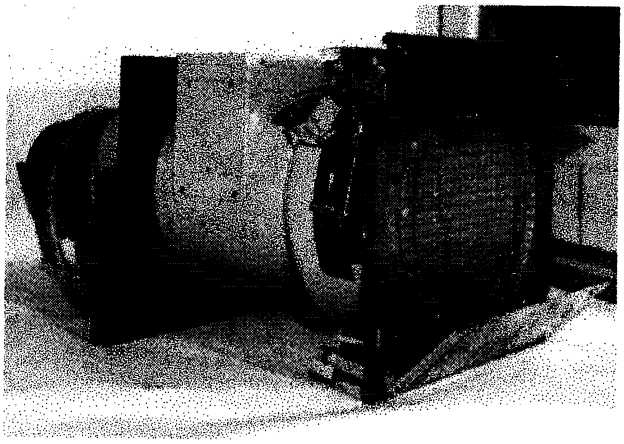

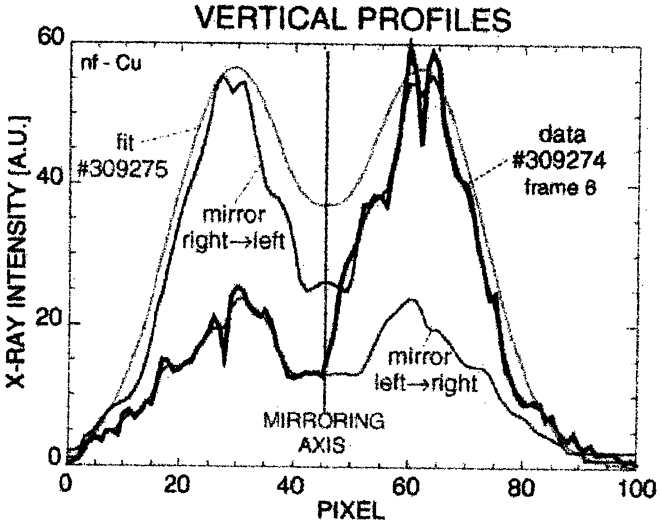

Result: T || f = 100 keV

- Energy of suprathermal electrons measured.
- Simulations show that Tphoton depends on T || f.

Conceptual Design Review
GA - San Diego 9/27/00
S. von Goeler

PPPL
PRINCETON PLASMA PHYSICS LABORATORY

Results from Tangential X-ray Imaging # 1.

Hollow Hard X-ray Profiles during LHCD.

S. von Goeler and S. Jones on PBX-M.

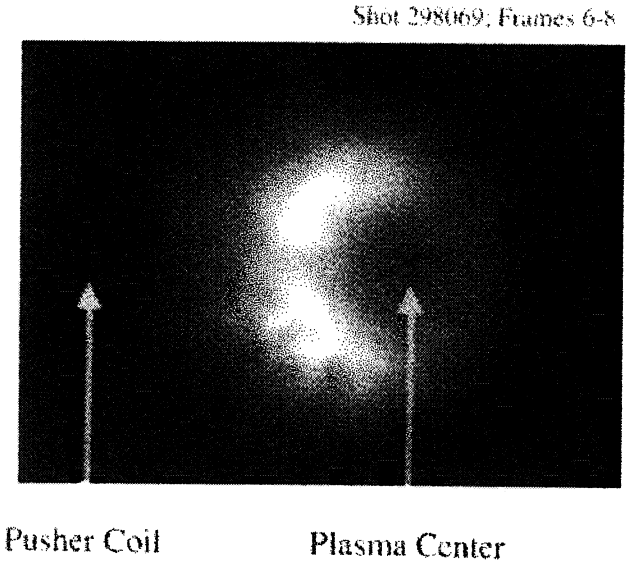

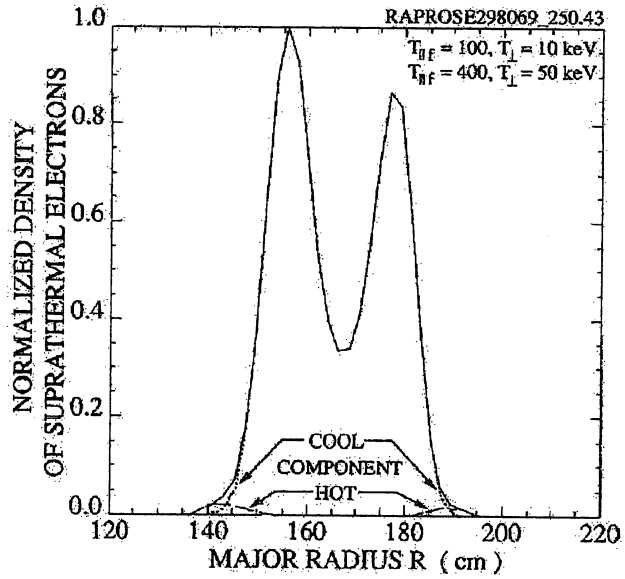

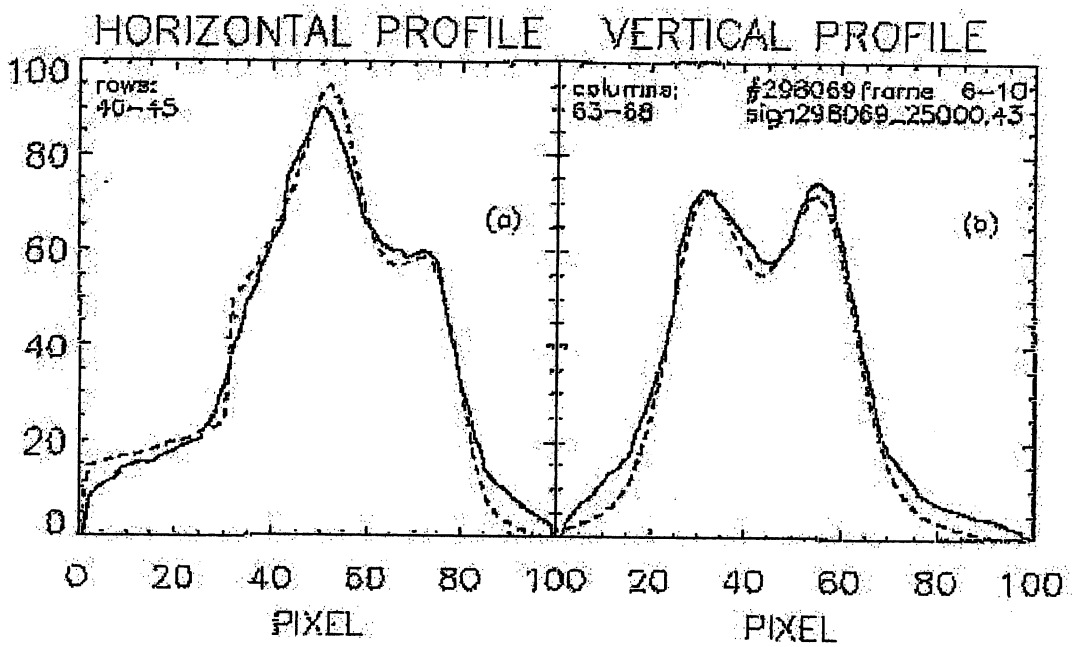

- Hollow profiles of suprathermal electrons observed during LHCD.
- Excellent agreement with simulations.

Conceptual Design Review
GA - San Diego 9/27/00
S. von Goeler

PPPL
PRINCETON PLASMA PHYSICS LABORATORY

Results from Tangential X-ray Imaging # 4.

Transport of Hot Electrons.

S. Jones and S.von Goeler on PBX-M.

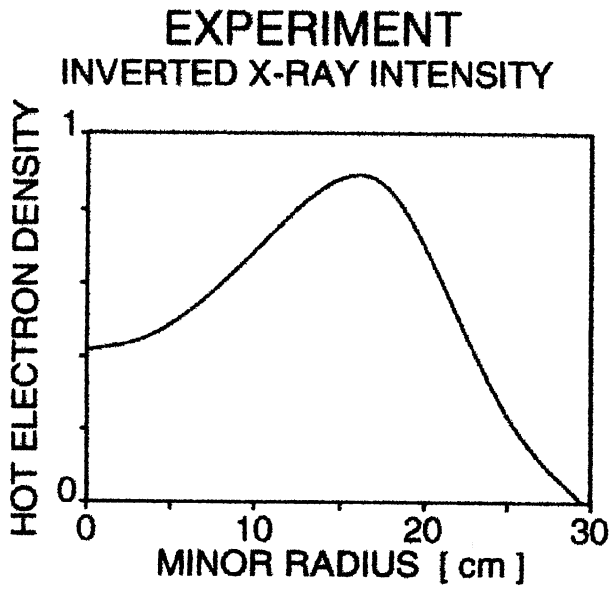

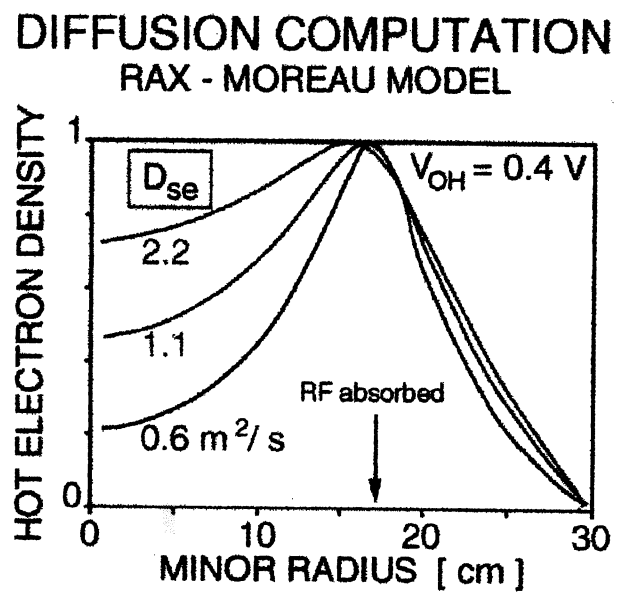

LH Modulation Experiments

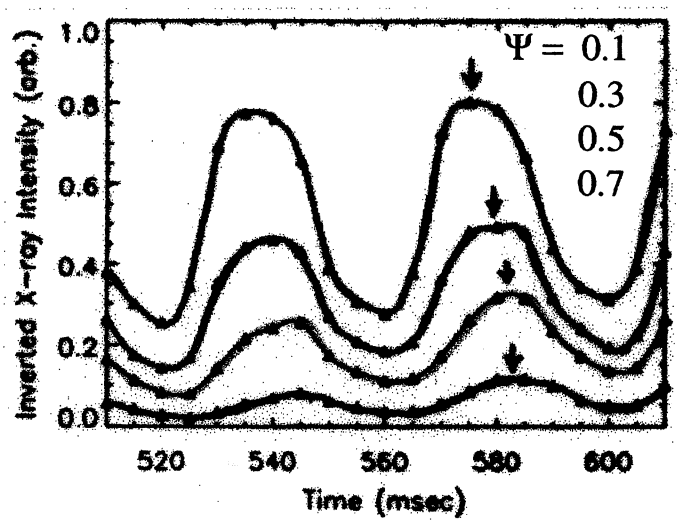

- Hollow profiles imply (Girruzi code) $D_{HE} < 2$ m^2/sec
- LH modulation experiments show $D > 0.2 \ldots 0.5$ m^2/sec

PPPL
PRINCETON PLASMA PHYSICS LABORATORY

Results from Tangential X-ray Imaging # 5.

MHD Fluctuations - Loss of Hot Electrons.

S.von Goeler and S. Jones on PBX-M.

- HotSpots (Bremsstrahlung from limiters + walls) seen during MHD.
- MHD causes Loss of Hot Electrons (long before disruption !).

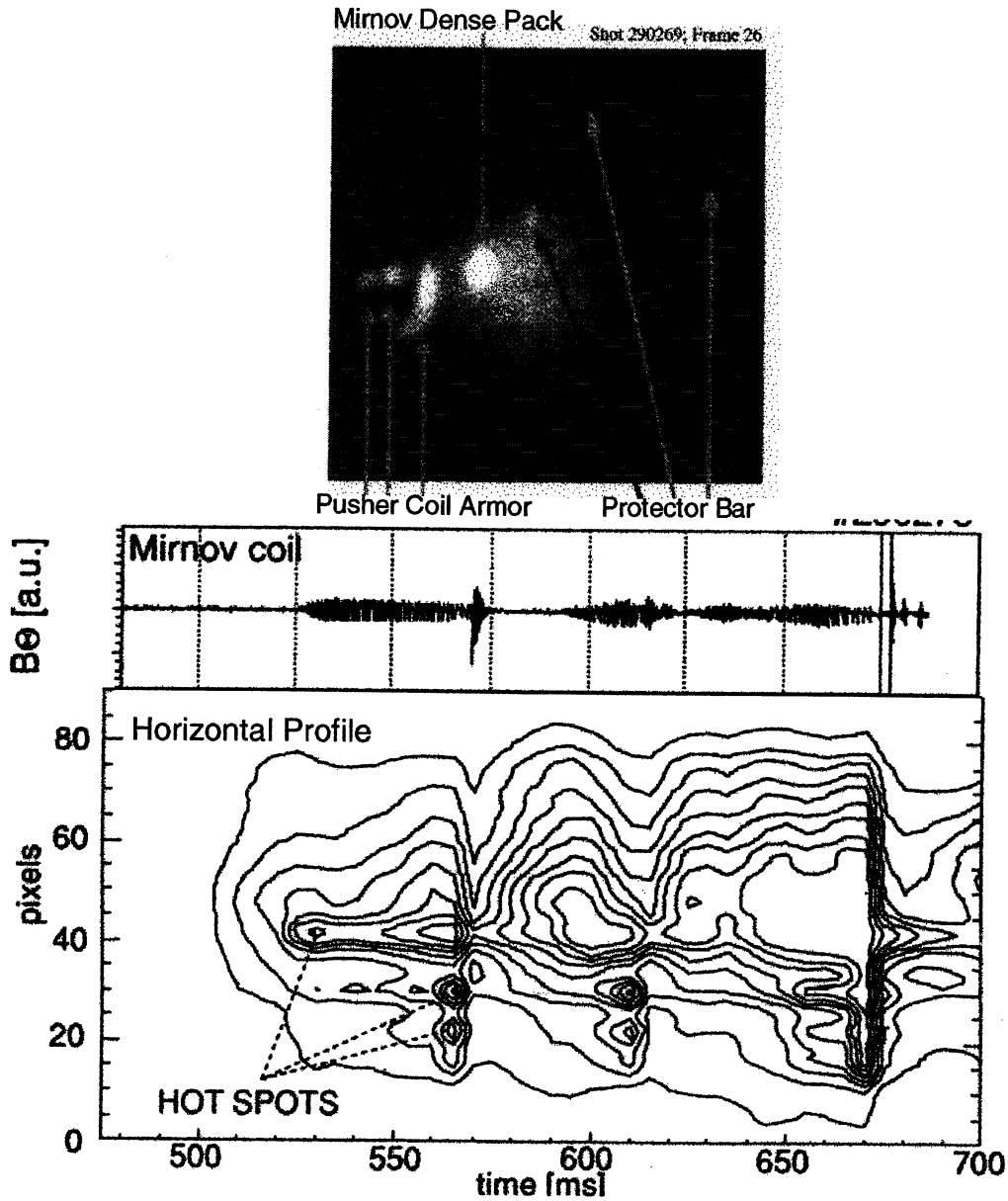

- Wall Loss of suprathermal electrons can be measured.
- Technique was not developed on PBX-M.

PPPL PRINCETON PLASMA PHYSICS LABORATORY

History of Tangential X-ray Imaging # 3.

Fast Soft X-ray Camera on TEXTOR

Fuchs, von Goeler, Toi, Ohdachi.

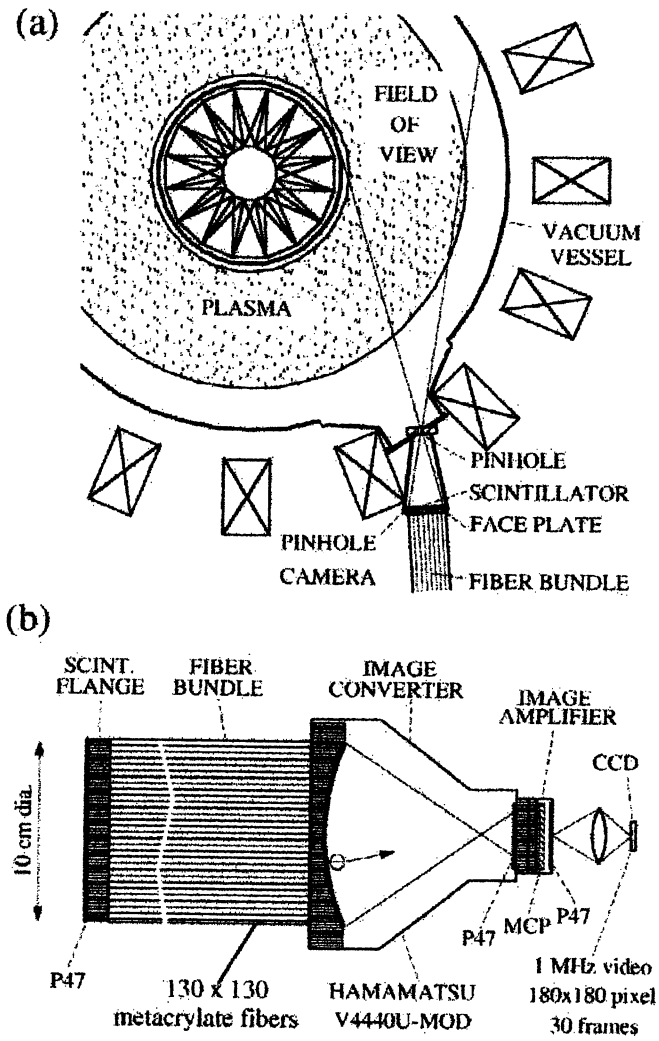

- Purpose: 2D imaging of MHD instabilities.
- Fast phosphors (P47). Fast CCD (PSI 1 MHz framing camera),
- Scintillator in vacuum.

Conceptual Design Review
GA - San Diego 9/27/00
S. von Goeler

PPPL
PRINCETON PLASMA PHYSICS LABORATORY

From LHCD to ECCD

- Tangential x-ray imaging technique was successfully used by von Goeler et al. to study LHCD in PBX-M.

- Similar technique can be used for ECCD experiments in DIII-D.

ECCD Theory

Fisch & Boozer (PRL, 1980):
asymmetric plasma resistivity by heating electrons traveling in one direction.

Karney & Fisch(NF,1981)

2D Fokker-Planck calculation

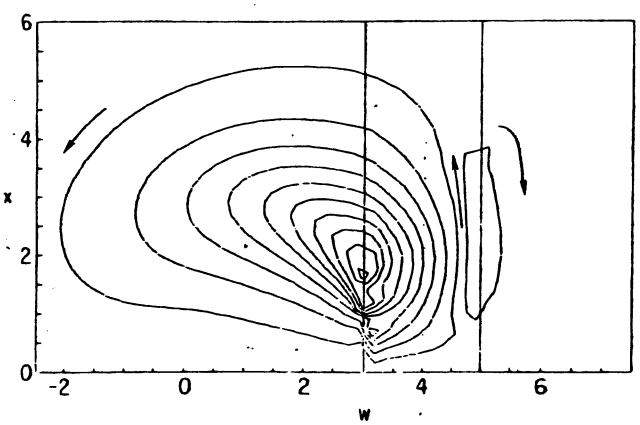

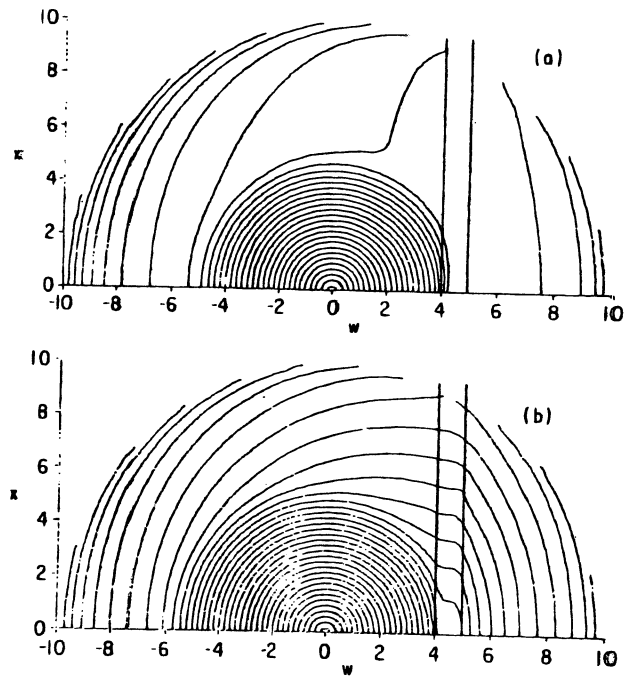

Trapped particle effect
-(Ohkawa)
-observed in
W7-AS, TCV

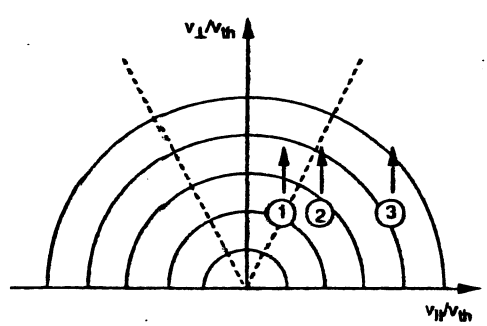

CQL3D code (3D, bounce-averaged FP code)
D_e=0, cross-field diffusion not fully tested.

Why do we need tangential view ?

Bremstrahlung Radiation

$$N(k,\theta) = \frac{A_1 A_2}{4\pi b^2} \int_{\Delta t} dt \int_{\Delta k} dk' G(k,k')$$

$$\frac{dN(k',\theta')}{dk'dt} \propto \int d^3\vec{p}_0 f(\vec{p}_0, \theta_p) \frac{d\sigma(k', \theta_0, p_0, Z_i)}{dk' d\theta_0} v_0$$

$$\times \int d\ell\, W(\theta, \theta', \ell)\, n_e(\ell) n_t(\ell) \int_{k'+1}^{\infty} dp_0 c p_0^3 / E_0$$

$$\times \int_0^{\pi} \sin(\theta_0)\, d\theta_0 \left(Z_{eff} \frac{d\sigma_{ei}}{dk' d\theta_0} + \frac{d\sigma_{ee}}{dk' d\theta_0} \right.$$

$$\left. + \sum_i \left(\frac{n_i}{n_e}\right) \frac{d\sigma_r}{dk' d\theta_0} \right) \int_0^{2\pi} d\phi_0 f(p_0, \theta_p, \ell)$$

$k' = h\nu / mc^2$

Bremstrahlung Radiation Pattern

(a) Electron/proton (b) Electron/electron

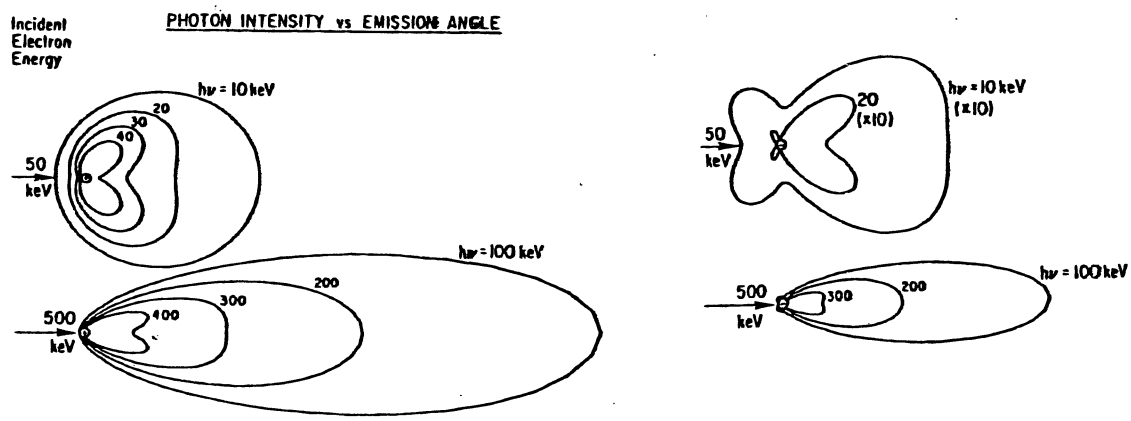

- forward peaking (co-viewing sees more x-ray)
- extraction of f_e not straight forward,
- conventional tomography needs modification
- tightly constrained by results from TORAY & CQL3D

Why 2D Imaging ?

1. Much more spatial information:

   5000 pixels vs 30 detectors.

2. ECCD/ECH produce energetic electrons with poloidally asymmetric distribution.
   - 1D imaging at B_{min} not enough.

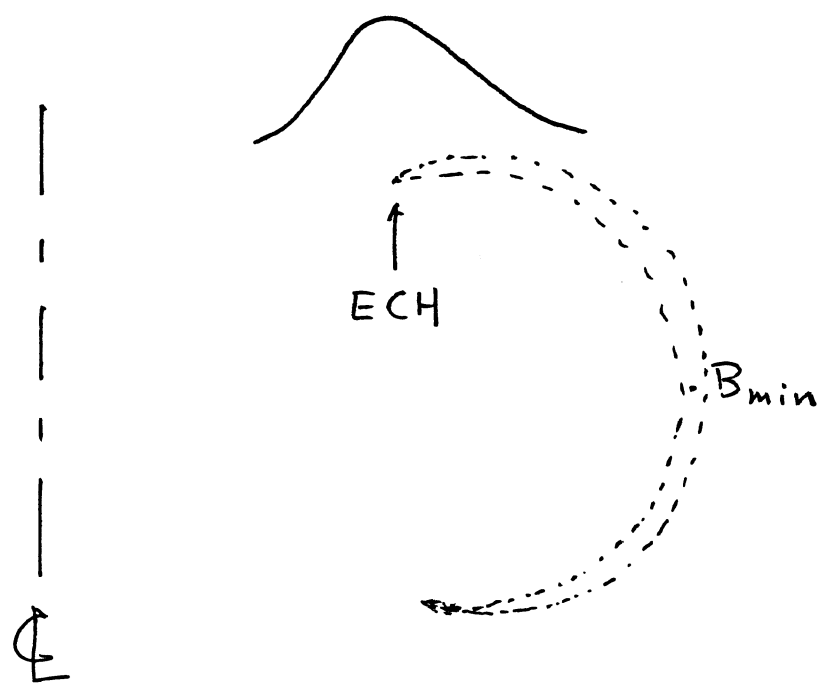

ECCD Experiments

Loop voltage measurement:
TFR, DITE, TCA, DIII-D, TCV ...
W7-AS, CLEO,
- no direct j(r) data

MSE measurements for j(r) & q(r):
DIII-D, JT-60U
- no velocity space information

For better understanding of ECCD physics,
better extrapolation to future experiments,
we need to study the velocity space dynamics,
- measurement of $\mathbf{f_e(v,r,t)}$ - HXC

Russian PHA system on DIII-D:
- single channel, no spatial profile info'.

Array of CdTe detectors:
TCV tokamak (Laussane), 14 chords,
8 energy channels/chord, $\Delta r \sim 2$cm, $\Delta t \sim 5$ms

DIII-D HXC - 2D X-Ray Imaging System

HXC produces 2D intensity map $I(x,y,t)$.

CQL3D code calculates $f_e(v,r,t)$ &
$I(x,y,t)$.

Adjust D_e to get best fit
- provides estimate on D_e.

Simple analytic functions will be much faster – needs experience.

LHCD was analyzed by von Goeler:
$f_e = f_e\,(T_\perp, T_{\parallel f}, T_{\parallel b})$ works well.

f_e will take a different form for ECCD.

Other Possible Experiments

1. Co/counter asymmetry
   asymmetric resistivity becomes
   asymmetric x-ray emissivity

2. Image of trapped electrons.

3. Estimates on $D_e(E)$ from:
   a. $f_e(v,r,t)$
   b. energetic electrons moving across B

4. Effects of fluctuations on $D_e(E)$ in plasmas with MHD, shear flow, impurity injection etc.

5. New MHD activities.

Asymmetric emissivity

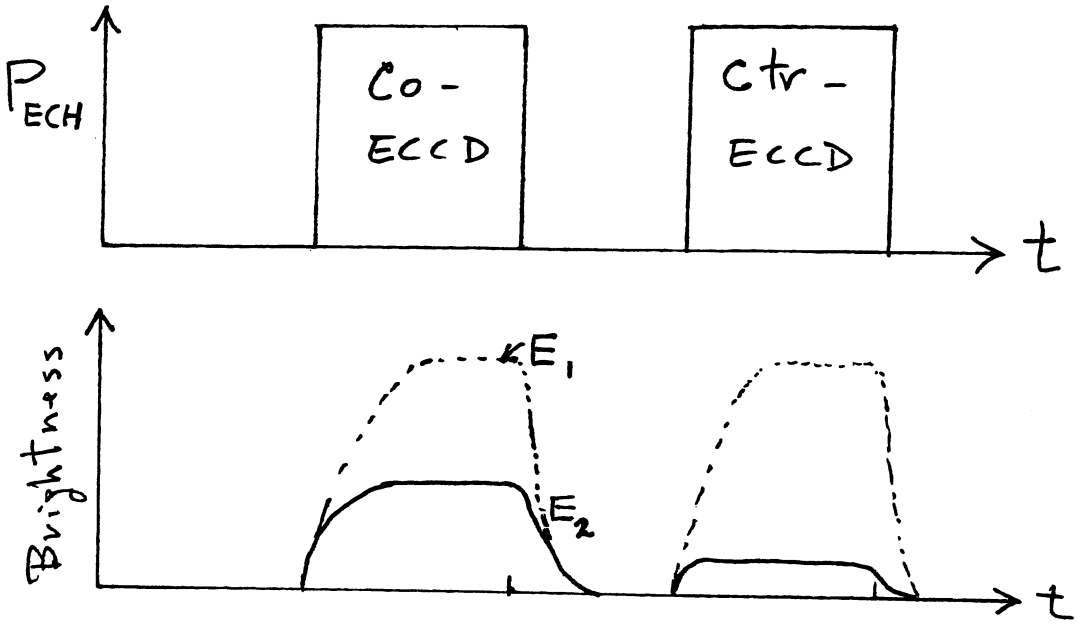

Trapped electron image

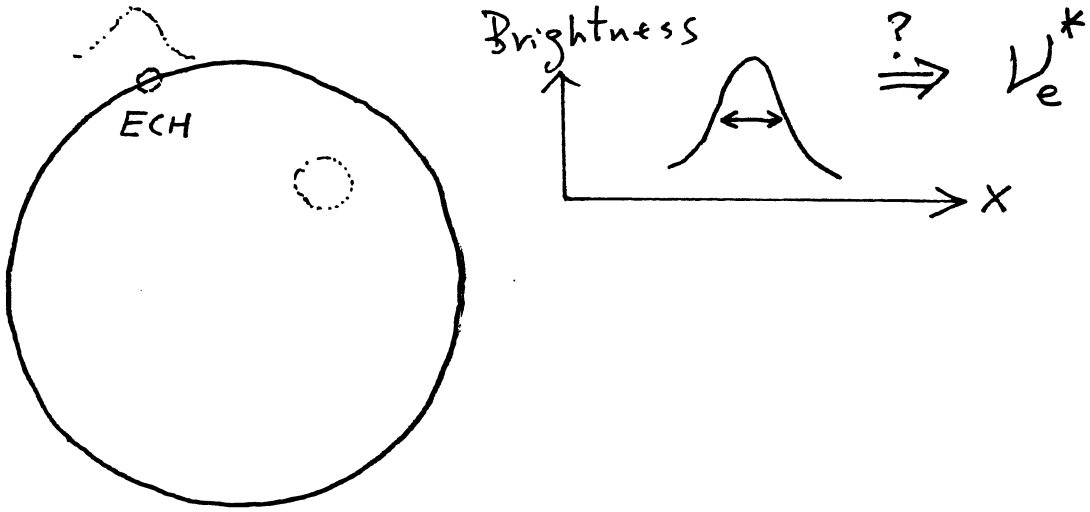

Magnetic stochasticity aggravated by MHD?

sawteeth: 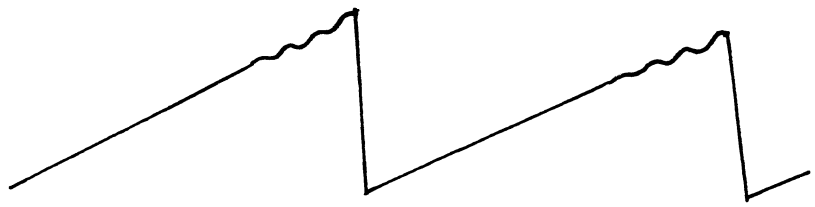

P_{ech} 
(core/off-axis heating)

Thin foil selects photon energy,
spread of photon intensity gives D(E).

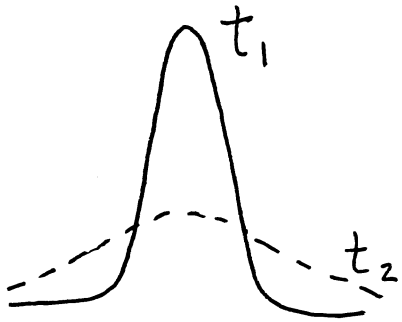

core heating

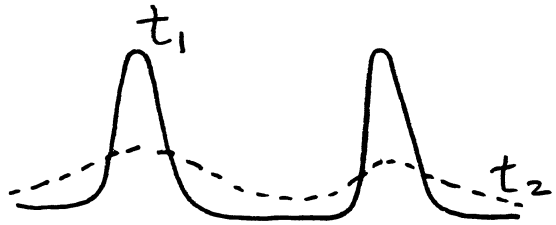

off-axis heating

Find D(E) with or without m=1,
before/during sawtooth crash.

Engineering design for the tangential x-ray camera

Selection of DIII-D Port Location

Tangential Co-View Of Plasma Current

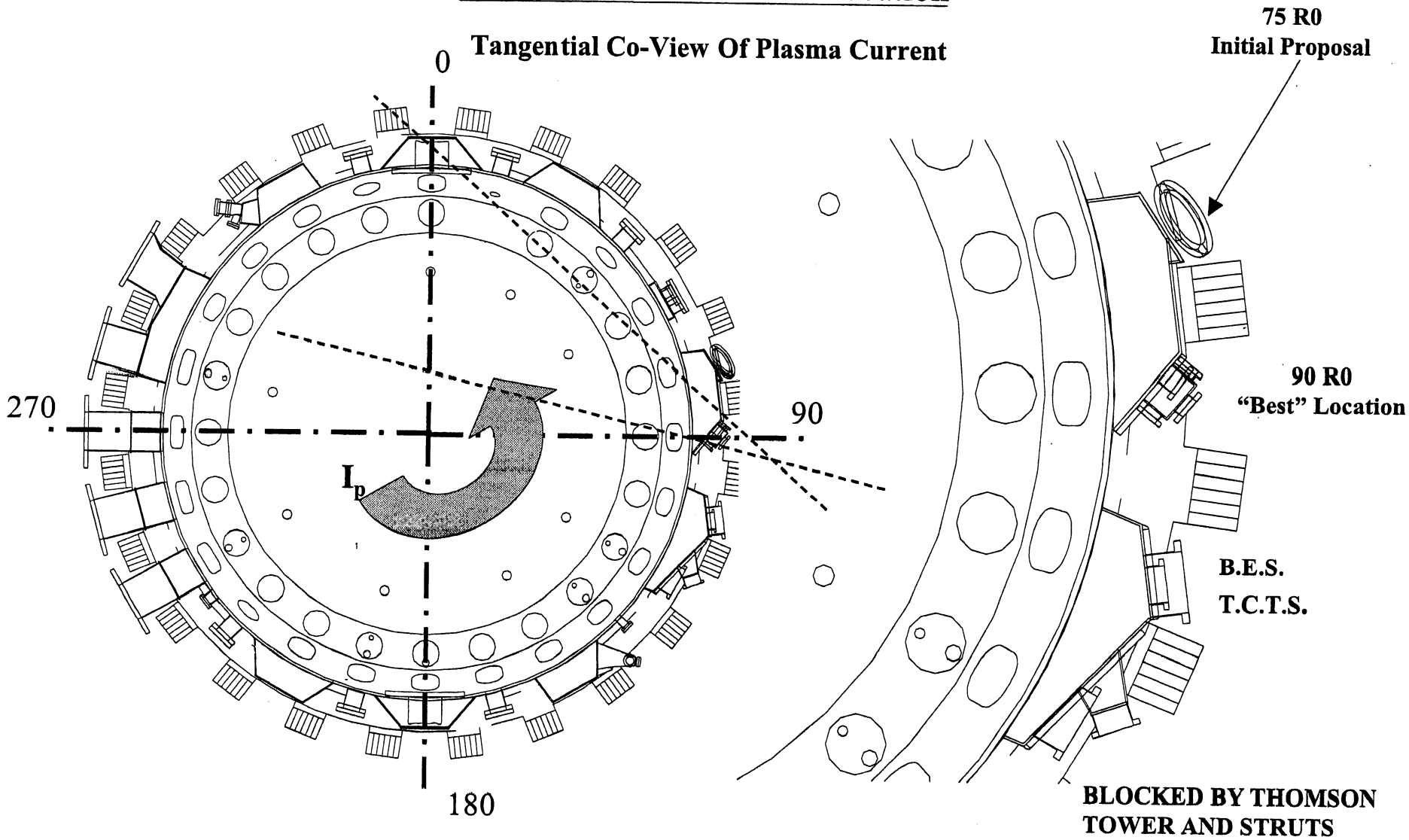

Plan View of DIII-D Ports, Looking Down from Above Machine

PPPL PRINCETON PLASMA PHYSICS LABORATORY

DIII-D HARD X-RAY CAMERA

REF 9/27/00

Hard X-Ray Camera Design System Overview

NEAR MACHINE COMPONENTS
- Vacuum Interface Cone and Beryllium Window
- Pin Hole Camera w/ Variable Lead Apertures and Foils
- Fiber Optic Face Plate and Scintillator
- X-Ray and Neutron Shielding

DIII-D Structural Upgrades
Near Machine Shielding
Total Dead Weight: 2,375 lbs

"Remote" Shielding
Total Dead Weight: 7,100 lbs

In-Vessel Graphite Neutron Shielding

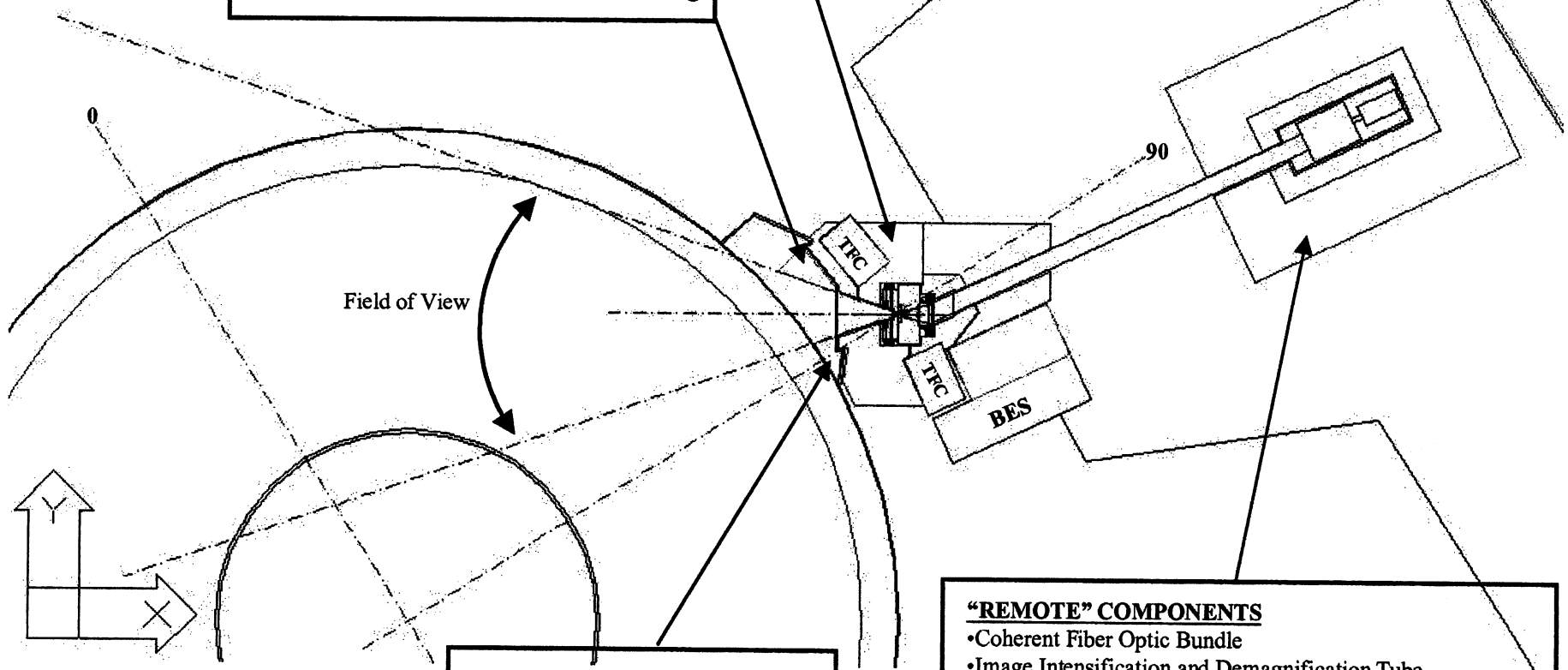

Vessel Port Box Modification

"REMOTE" COMPONENTS
- Coherent Fiber Optic Bundle
- Image Intensification and Demagnification Tube
- High Speed CCD
- X-Ray, Neutron and Magnetic Field Shielding
- Data Acquisition and Power Supply Equipment (Not Shown)

PPPL PRINCETON PLASMA PHYSICS LABORATORY

DIII-D HARD X-RAY CAMERA

REF 9/27/00

"Compact" TEXTOR Design System Components Overview

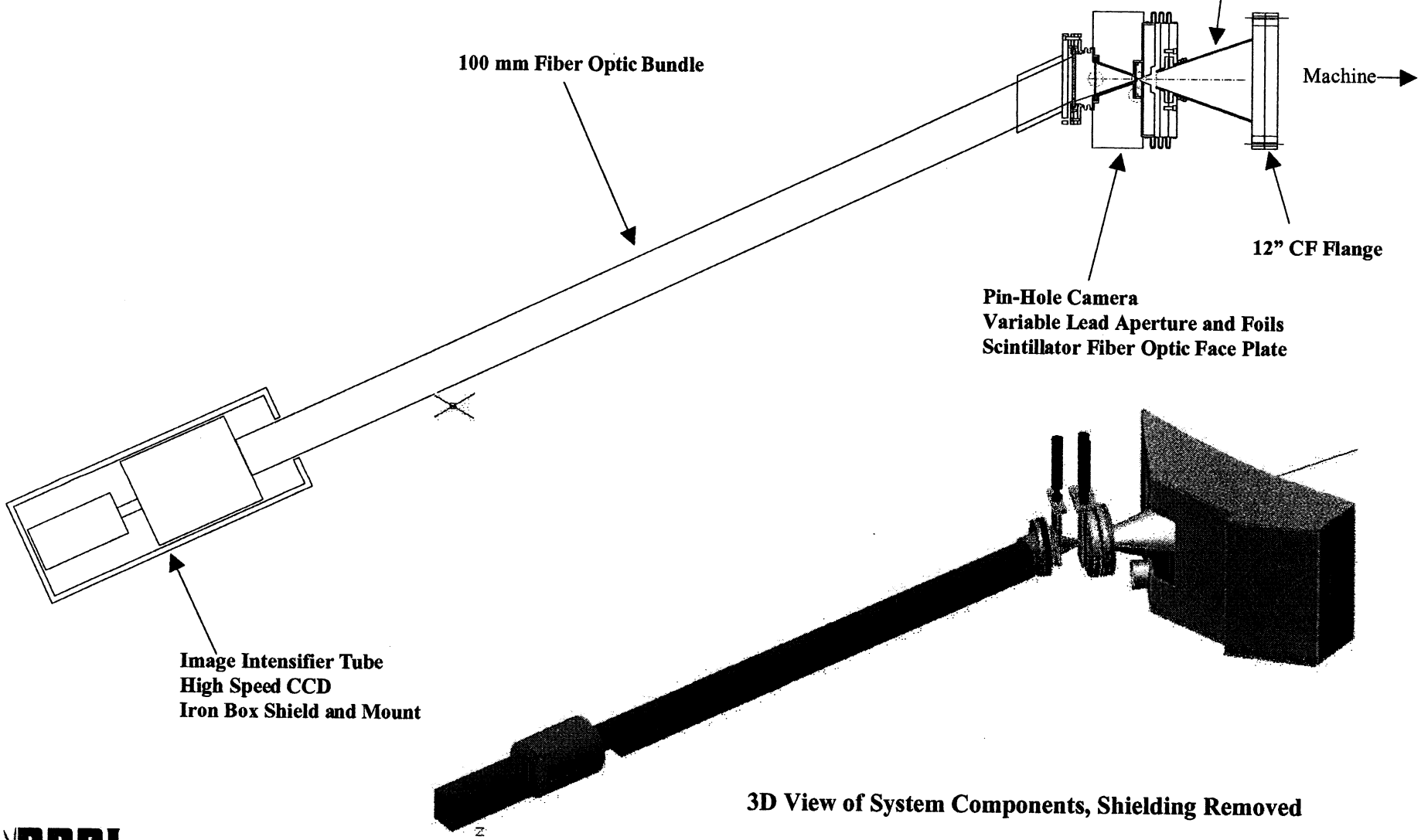

PPPL PRINCETON PLASMA PHYSICS LABORATORY

DIII-D HARD X-RAY CAMERA

REF 9/27/00

Pin Hole Camera Design

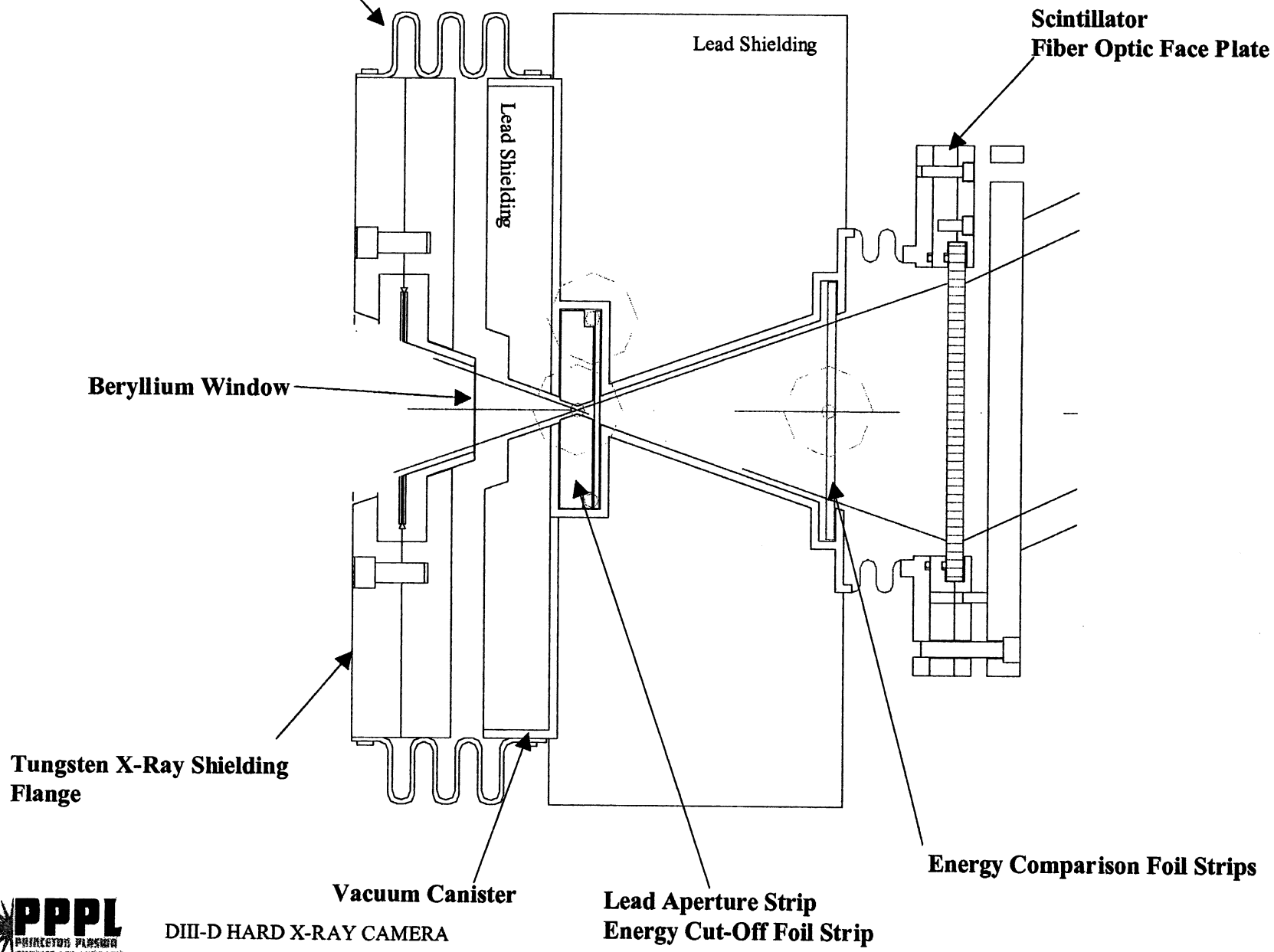

PPPL PRINCETON PLASMA PHYSICS LABORATORY

DIII-D HARD X-RAY CAMERA

REF 9/27/00

Scintillator Fiber Optic Face Plate

Bellows

- Change of Face Plate
- Misalignments

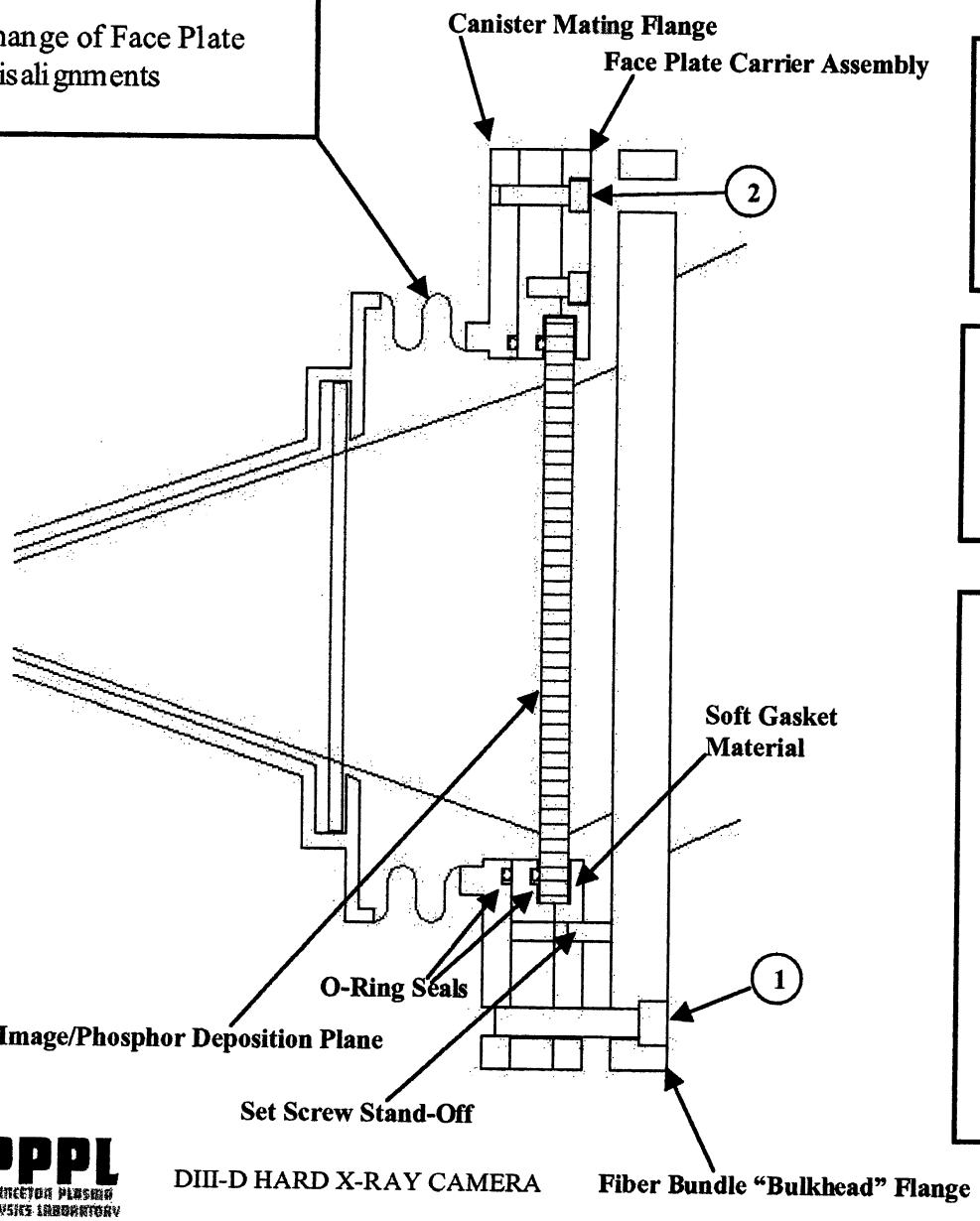

Design Criterion

- Couple Scintillator to Fiber Optic Bundle
- Interchangeable Face Plates
- Vacuum Interface

Fiber Optic Face Plate

- 130 mm Dia (100 mm useful) x 6.35 mm thk
- NA 1.0, 15-18 Micron Fiber Size
- Vacuum Safe to 2E-10

Preferred Phosphor, P47:

Fast Decay (<1 μsec)

- Good Efficiency (tested in Juelich)
- Blue Phosphor (match photocathode)
- Disadvantage: Strong K-edge at 17 keV

Thickness

400 μm

- Registers X-Rays below 50 keV
- sensitive to neutrons

20 μm

- Registers photons below 10 keV (thermal x-rays)
- 20x less sensitive to neutrons

PPPL Princeton Plasma Physics Laboratory

DIII-D HARD X-RAY CAMERA

REF 9/27/00

Pin-Hole Camera Design

X-Ray Optics Layout

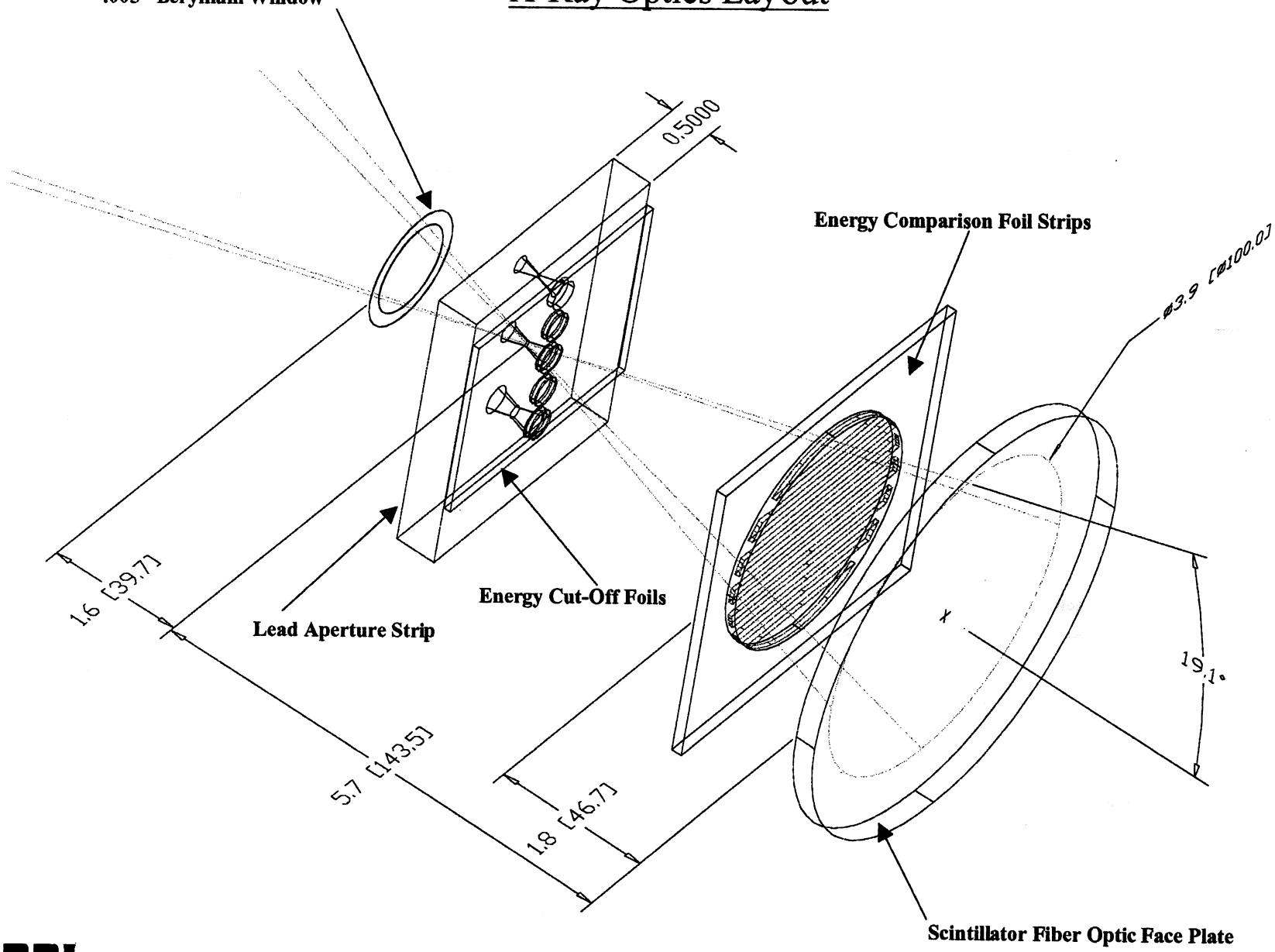

PPPL PRINCETON PLASMA PHYSICS LABORATORY

DIII-D HARD X-RAY CAMERA

REF 9/27/00

Stainless Steel Aperture and Foil Vacuum Canister

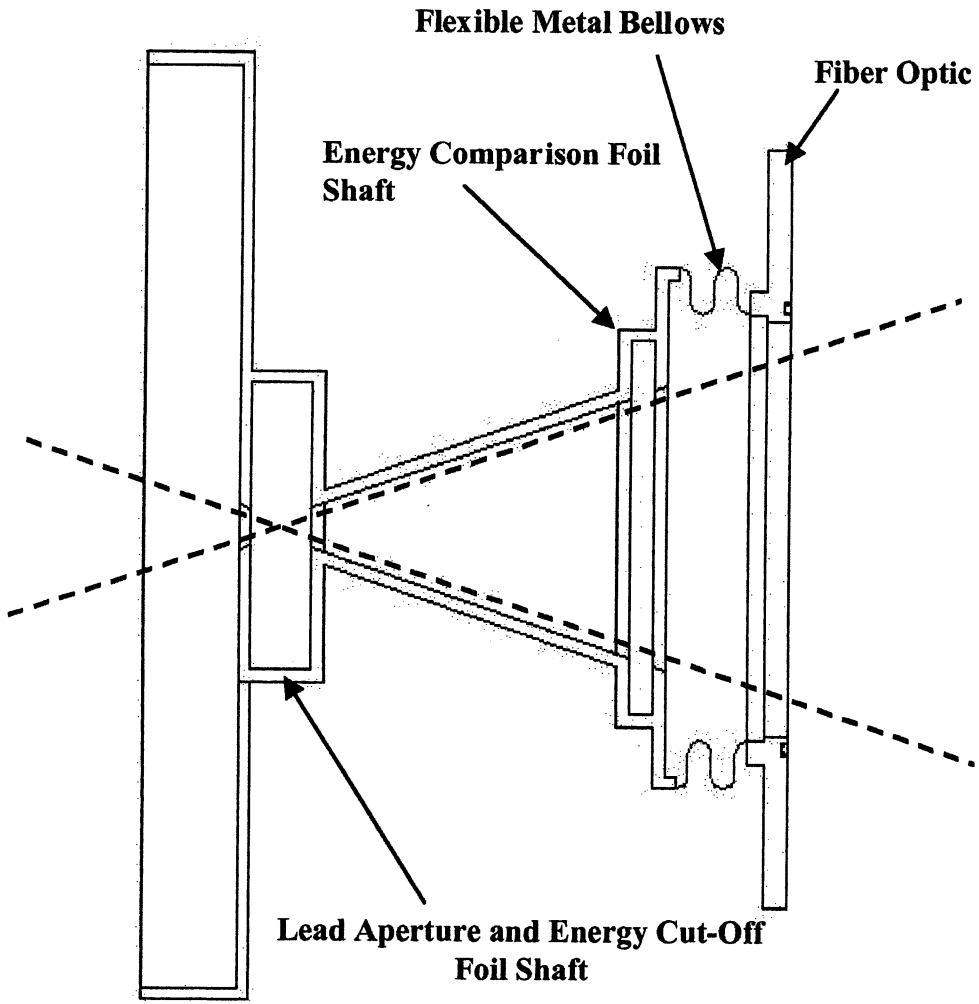

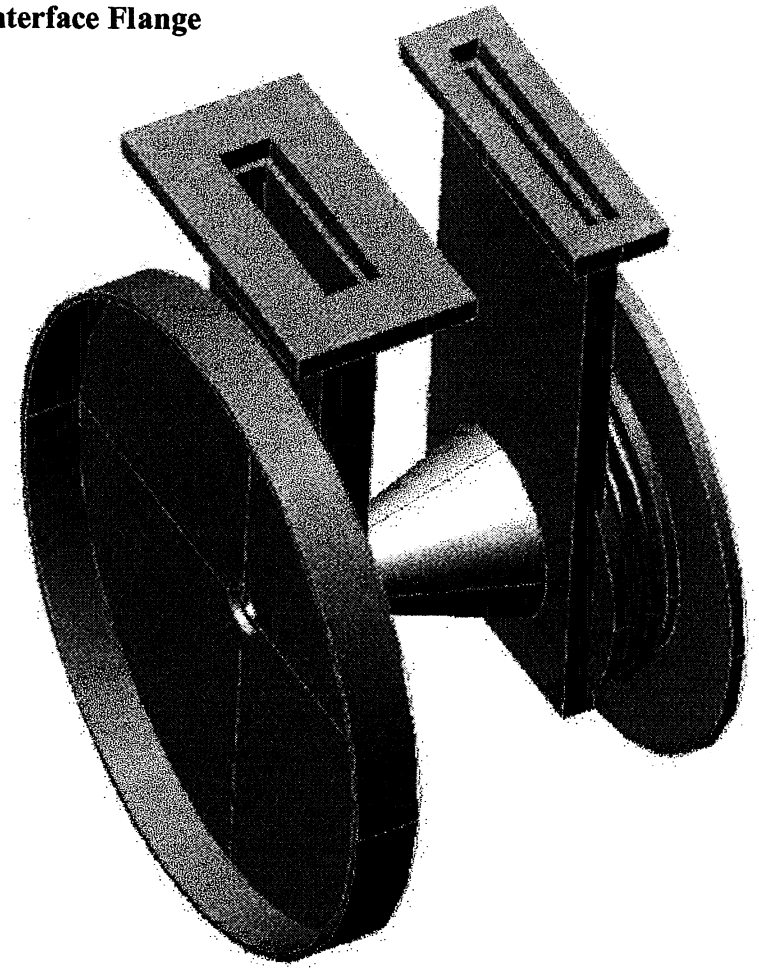

Vacuum Canister Weldment

Lead Aperture and Energy Cut-Off Foils

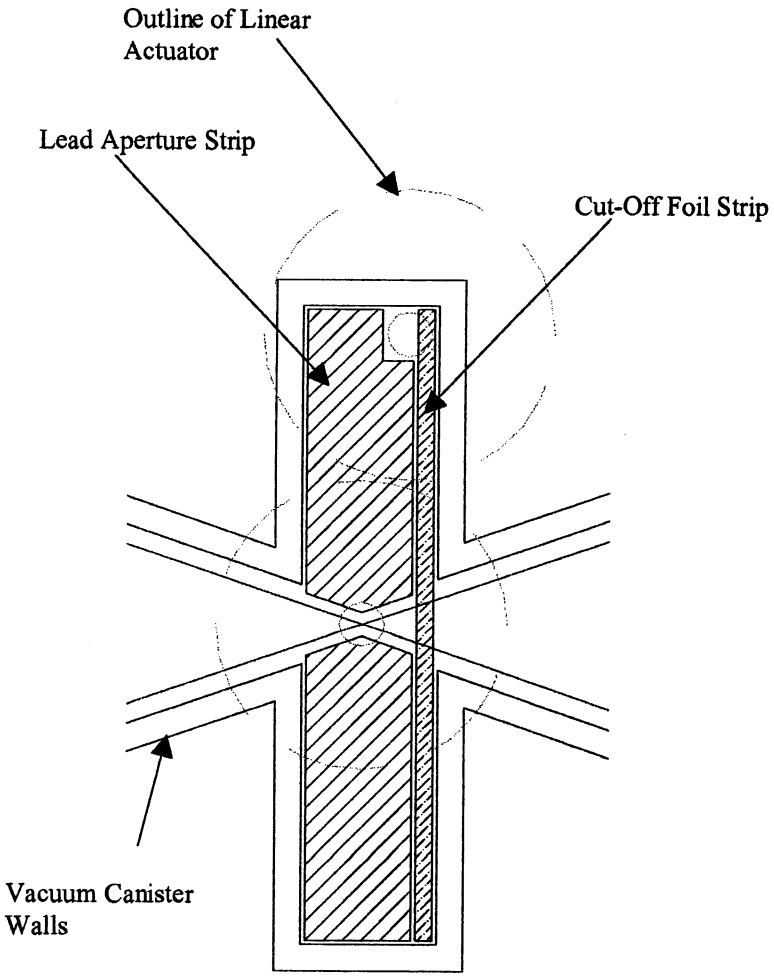

PLAN VIEW

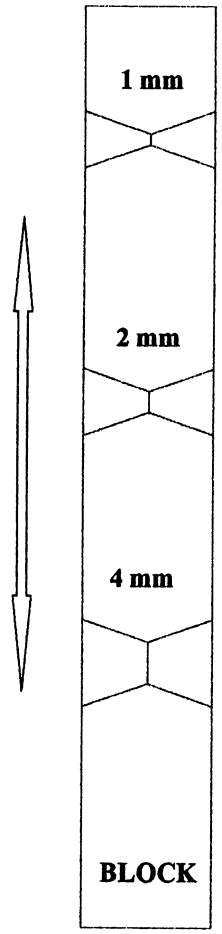

Pin-Hole Camera Design

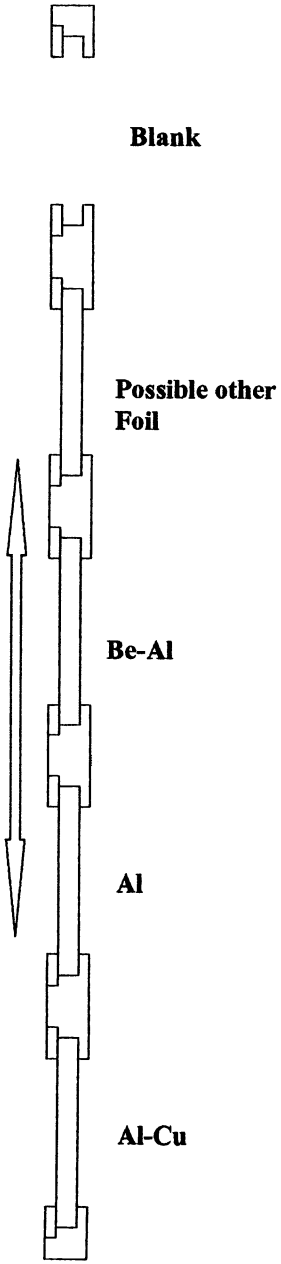

PPPL PRINCETON PLASMA PHYSICS LABORATORY

DIII-D HARD X-RAY CAMERA

REF 9/27/00

Cut-Off Foil Range

Measurement Objective	*Plasma Electron Temperature*	*X-Ray Energy Cut-Off*	*Foil Material (+ .005" Be Window)*
Thermal	**Full Range**	**2.4 keV**	**Blank**
Suprathermal	**1 keV**	**6 keV**	**.001" Al**
Suprathermal	**2 keV**	**12 keV**	**.010" Al**
Suprathermal	**4 keV**	**24 keV**	**.010" Al + .002" Cu**

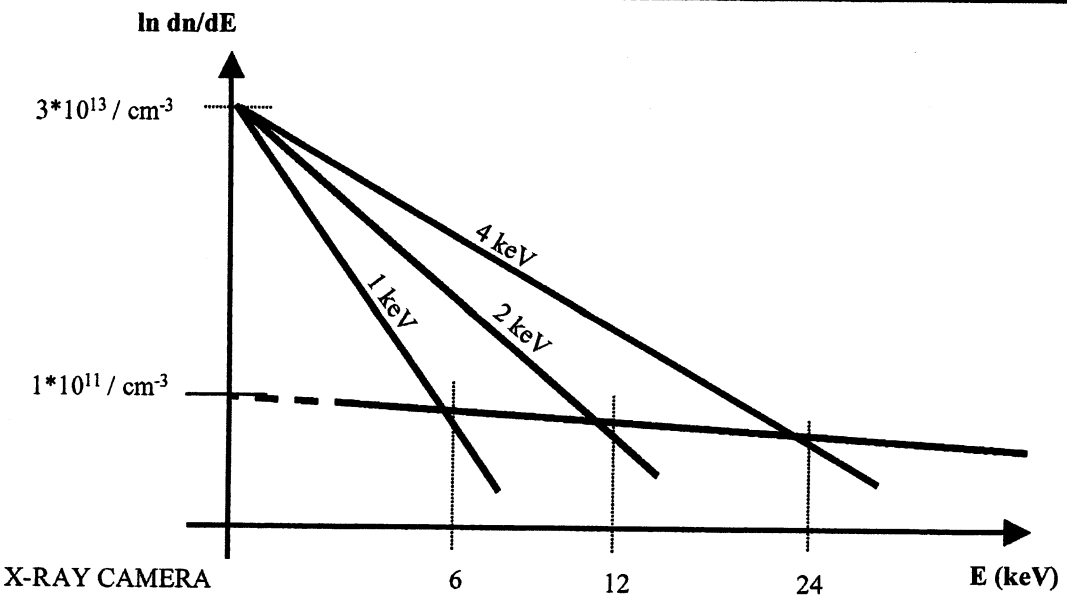

DIII-D HARD X-RAY CAMERA

Energy Comparison Foil Strips

.1 mm Thick Aluminum Foil ➔ 20 keV Cut-Off
.5 mm Thick Copper Foil ➔ 50 keV Cut-Off

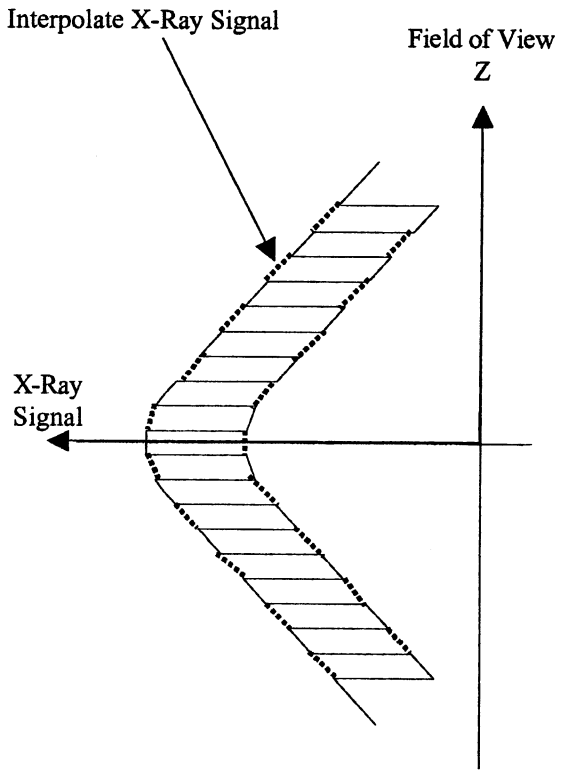

Interpolation Between Signal Peaks

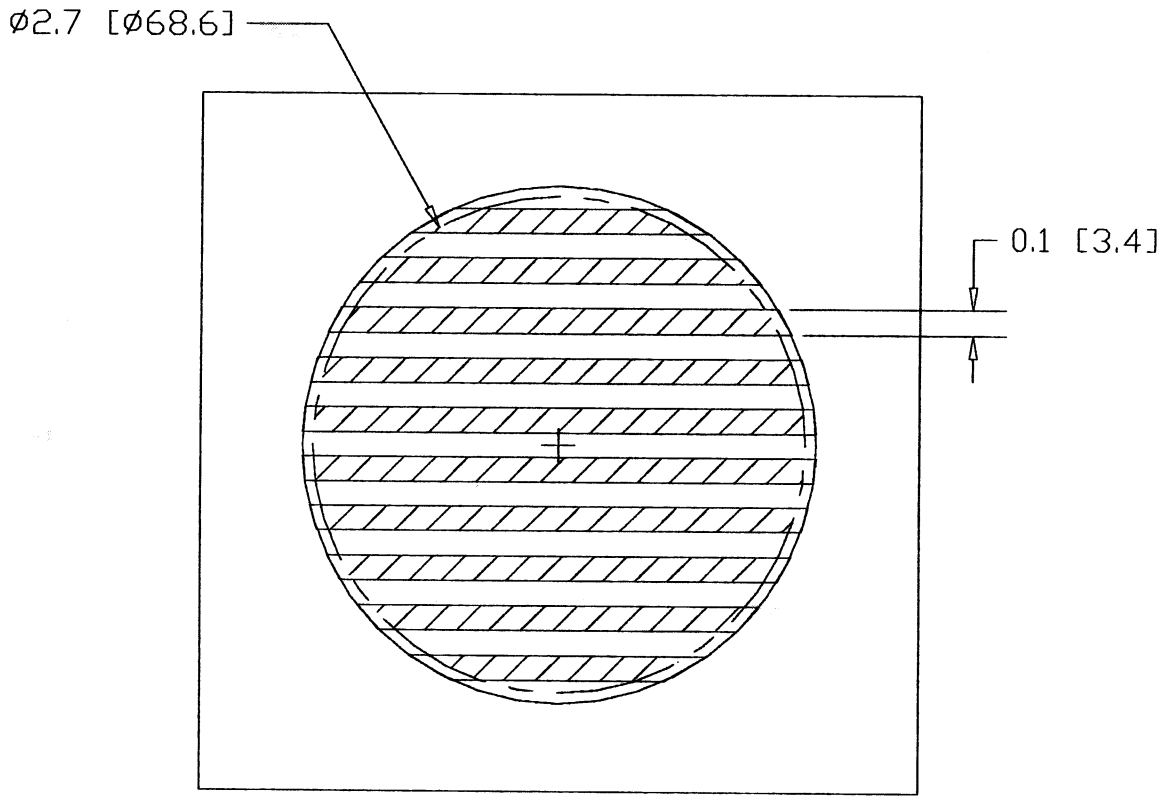

Pin Hole Camera Assembly

Linear Actuators

- Capable of Multiple Positions with Fine Resolution and Repeatability
- Method for sensing position of each aperture and foil
- Foil Strip Actuation Only Needs to be On/Off

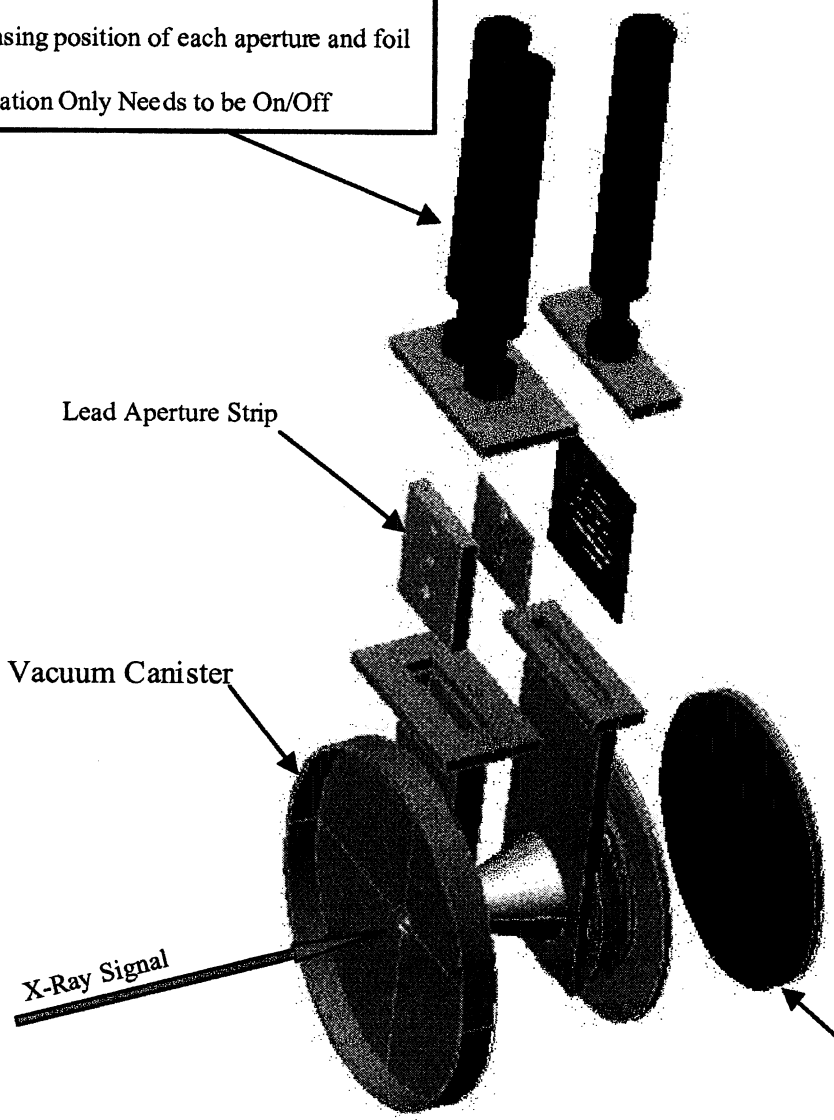

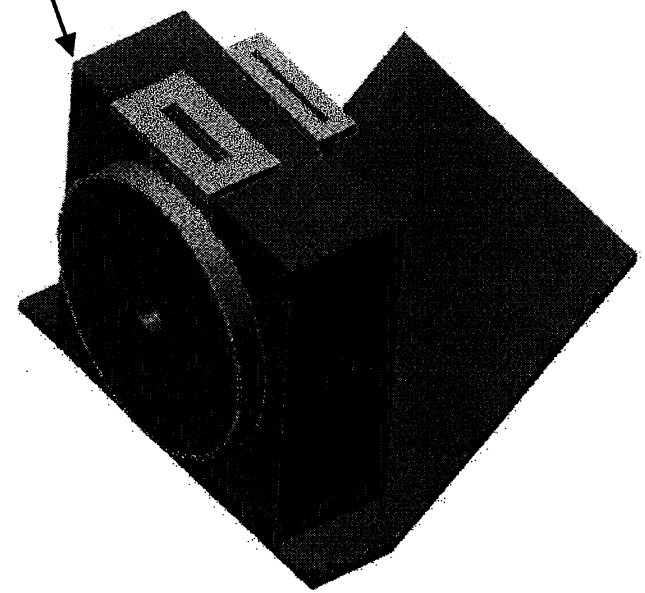

The Vacuum Canister Will Be Encased In A Block of Lead and Have a Forward Lead Disc.

Scintillator Fiber Optic Face Plate

PPPL PRINCETON PLASMA PHYSICS LABORATORY

DIII-D HARD X-RAY CAMERA

Neutron noise is the major difficulty

1. H-plasma & H-beams :
   undesirable because it takes days to clean up carbon tiles.
2. Thick neutron shielding:
   limited by available space.

The present design should have no problem for MHD studies – plenty of photons at $E \sim T_e$.

At high beam power, neutron noise will be a problem for $E \sim 50$ keV. Expect 2D imaging system to work at $S_n < 5 \times 10^{14}$ n/s.

1-D CdZnTe array is the only hope to operate at $S_n > 10^{15}$ n/s.

Conclusion

- The Hard X-Ray Camera is a valuable addition to DIII-D.
- It fits well with the ECCD program(unique).
- It opens up new frontiers
  - electron transport -
    pertinent to the Advanced Tokamak program.